sales@murada.co.id
www.murada.co.id

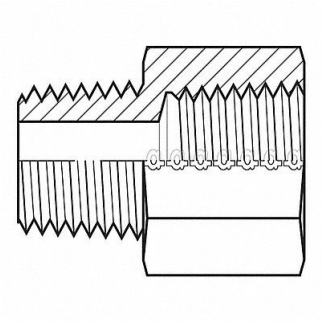

ADAPTALL Hose Adapter 1/4 BSPT 1/4 NPT, 55DT80

Item **12HMQ2610** Mfr. Model **90420404**

Product Details

Item Reference: **55DT80**	Width (in): **0.8**
Brand: **ADAPTALL**	Height (in): **0.8**
Weight (lb): **0.1**	Harmonization Code: **7307995045**
Length (in): **1.5**	

Product Description

Hydraulic Hose Adapter For Hose Type Hydraulic Thread Size 1/4 In.-18 Fitting Shape Straight Rigid Flange Size Not Applicable 5 000 psi Includes O-Ring No Crimpable No Hose Fitting A Gender Male Hose Fitting B Gender Female Hose Fitting A Size 1/4 in Hose Fitting B Size 1/4 in Hose Fitting A Connection Type BSPT Hose Fitting B Connection Type NPT Fitting Material Carbon Steel x Carbon Steel 12L14 12L15