sales@murada.co.id
www.murada.co.id

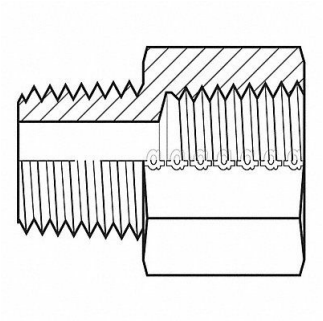

ADAPTALL Hose Adapter 1/8 BSPT 1/8 NPT, 55DT79

Item **12HMQ2609** Mfr. Model **90420202**

Product Details

Item Reference: **55DT79**	Width (in): **6**
Brand: **ADAPTALL**	Height (in): **1**
Weight (lb): **0.1**	Harmonization Code: **7307995045**
Length (in): **8**	

Product Description

Hydraulic Hose Adapter For Hose Type Hydraulic Thread Size 1/8 In.-27 Fitting Shape Straight Rigid Flange Size Not Applicable 5 000 psi Includes O-Ring No Crimpable No Hose Fitting A Gender Male Hose Fitting B Gender Female Hose Fitting A Size 1/8 in Hose Fitting B Size 1/8 in Hose Fitting A Connection Type BSPT Hose Fitting B Connection Type NPT Fitting Material Carbon Steel x Carbon Steel 12L14 12L15