sales@murada.co.id
www.murada.co.id

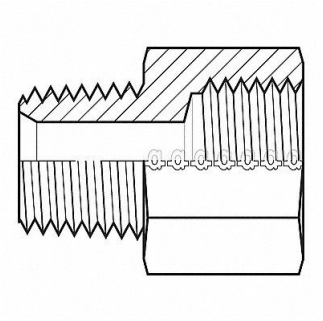

ADAPTALL Hose Adapter 1 NPT 1 BSPP, 55DT77

Item **12HMQ2607** Mfr. Model **90371616**

Product Details

Item Reference: **55DT77**	Width (in): **1.9**
Brand: **ADAPTALL**	Height (in): **1.7**
Weight (lb): **0.6**	Harmonization Code: **7307995045**
Length (in): **2.4**	

Product Description

Hydraulic Hose Adapter For Hose Type Hydraulic Thread Size 1 In.-11-1/2 Fitting Shape Straight Rigid Flange Size Not Applicable 3 500 psi Includes O-Ring No Crimpable No Hose Fitting A Gender Female Hose Fitting B Gender Male Hose Fitting A Size 1 in Hose Fitting B Size 1 in Hose Fitting A Connection Type BSPP Hose Fitting B Connection Type NPT Fitting Material Carbon Steel x Carbon Steel 12L14 12L15