sales@murada.co.id
www.murada.co.id

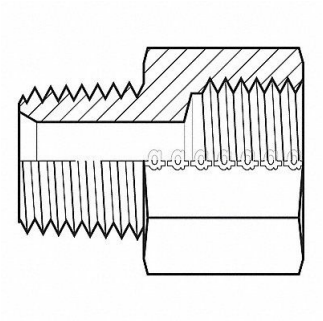

ADAPTALL Hose Adapter 3/8 NPT 3/8 BSPP, 55DT74

Item **12HMQ2604** Mfr. Model **90370606**

Product Details

Item Reference: **55DT74**	Width (in): **1**
Brand: **ADAPTALL**	Height (in): **1**
Weight (lb): **0.13**	Harmonization Code: **7307995045**
Length (in): **1.9**	

Product Description

Hydraulic Hose Adapter For Hose Type Hydraulic Thread Size 3/8 In.-18 Fitting Shape Straight Rigid Flange Size Not Applicable 4 000 psi Includes O-Ring No Crimpable No Hose Fitting A Gender Female Hose Fitting B Gender Male Hose Fitting A Size 3/8 in Hose Fitting B Size 3/8 in Hose Fitting A Connection Type BSPP Hose Fitting B Connection Type NPT Fitting Material Carbon Steel x Carbon Steel 12L14 12L15