sales@murada.co.id
www.murada.co.id

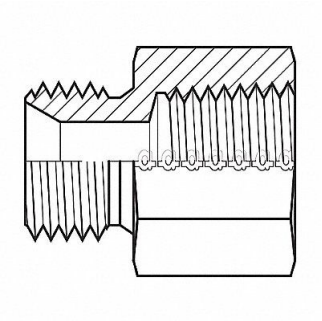

ADAPTALL Hose Adapter 1-1/4 BSPP 1-1/4 NPT, 55DT64

Item **12HMQ2594** Mfr. Model **90352020**

Product Details

Item Reference: **55DT64**	Width (in): **6**
Brand: **ADAPTALL**	Height (in): **3**
Weight (lb): **1.05**	Harmonization Code: **7307995045**
Length (in): **8**	

Product Description

Hydraulic Hose Adapter For Hose Type Hydraulic Thread Size 1-1/4 In.-11-1/2 Fitting Shape Straight Rigid Flange Size Not Applicable 2 500 psi Includes O-Ring No Crimpable No Hose Fitting A Gender Male Hose Fitting B Gender Female Hose Fitting A Size 1 1/4 in Hose Fitting B Size 1 1/4 in Hose Fitting A Connection Type BSPP Hose Fitting B Connection Type NPT Fitting Material Carbon Steel x Carbon Steel 12L14 12L15