sales@murada.co.id
www.murada.co.id

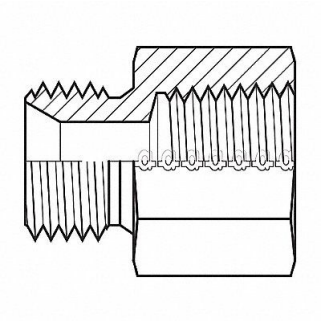

ADAPTALL Hose Adapter 3/4 BSPP 3/4 NPT, 55DT62

Item **12HMQ2592** Mfr. Model **90351212**

Product Details

Item Reference: **55DT62**	Width (in): **6**
Brand: **ADAPTALL**	Height (in): **1.7**
Weight (lb): **0.415**	Harmonization Code: **7307995045**
Length (in): **5**	

Product Description

Hydraulic Hose Adapter For Hose Type Hydraulic Thread Size 3/4 In.-14 Fitting Shape Straight Rigid Flange Size Not Applicable 4 000 psi Includes O-Ring No Crimpable No Hose Fitting A Gender Male Hose Fitting B Gender Female Hose Fitting A Size 3/4 in Hose Fitting B Size 3/4 in Hose Fitting A Connection Type BSPP Hose Fitting B Connection Type NPT Fitting Material Carbon Steel x Carbon Steel 12L14 12L15