sales@murada.co.id
www.murada.co.id

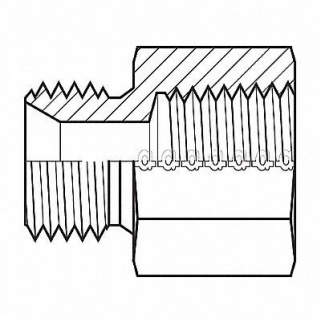

ADAPTALL Hose Adapter 3/8 BSPP 3/8 NPT, 55DT57

Item **12HMQ2587** Mfr. Model **90350606**

Product Details

Item Reference: **55DT57**	Width (in): **1.2**
Brand: **ADAPTALL**	Height (in): **1.2**
Weight (lb): **0.15**	Harmonization Code: **7307995045**
Length (in): **1.5**	

Product Description

Hydraulic Hose Adapter For Hose Type Hydraulic Thread Size 3/8 In.-18 Fitting Shape Straight Rigid Flange Size Not Applicable 4 000 psi Includes O-Ring No Crimpable No Hose Fitting A Gender Male Hose Fitting B Gender Female Hose Fitting A Size 3/8 in Hose Fitting B Size 3/8 in Hose Fitting A Connection Type BSPP Hose Fitting B Connection Type NPT Fitting Material Carbon Steel x Carbon Steel 12L14 12L15