sales@murada.co.id
www.murada.co.id

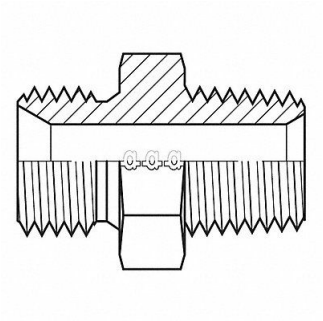

ADAPTALL Hose Adapter 3/8 BSPP 3/8 NPT, 55DR53

Item **12HMQ2549** Mfr. Model **90070606**

Product Details

Item Reference: **55DR53**	Width (in): **0.8**
Brand: **ADAPTALL**	Height (in): **0.8**
Weight (lb): **0.1**	Harmonization Code: **7307995045**
Length (in): **1.5**	

Product Description

Hydraulic Hose Adapter For Hose Type Hydraulic Thread Size 3/8 In.-18 Fitting Shape Straight Rigid Flange Size Not Applicable 4 000 psi Includes O-Ring No Crimpable No Hose Fitting A Gender Male Hose Fitting B Gender Male Hose Fitting A Size 3/8 in Hose Fitting B Size 3/8 in Hose Fitting A Connection Type BSPP Hose Fitting B Connection Type NPT Fitting Material Carbon Steel x Carbon Steel 12L14 12L15