sales@murada.co.id
www.murada.co.id

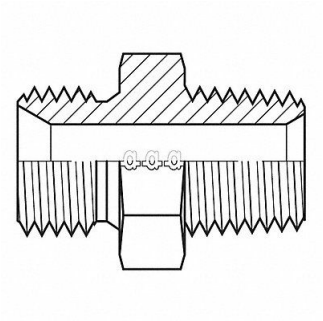

ADAPTALL Hose Adapter 3/8 BSPP 1/4 NPT, 55DR52

Item **12HMQ2548** Mfr. Model **90070604**

Product Details

Item Reference: **55DR52**	Width (in): **1.1**
Brand: **ADAPTALL**	Height (in): **1**
Weight (lb): **0.105**	Harmonization Code: **7307995045**
Length (in): **1.5**	

Product Description

Hydraulic Hose Adapter For Hose Type Hydraulic Thread Size 1/4 In.-18 Fitting Shape Straight Rigid Flange Size Not Applicable 4 000 psi Includes O-Ring No Crimpable No Hose Fitting A Gender Male Hose Fitting B Gender Male Hose Fitting A Size 3/8 in Hose Fitting B Size 1/4 in Hose Fitting A Connection Type BSPP Hose Fitting B Connection Type NPT Fitting Material Carbon Steel x Carbon Steel 12L14 12L15