sales@murada.co.id
www.murada.co.id

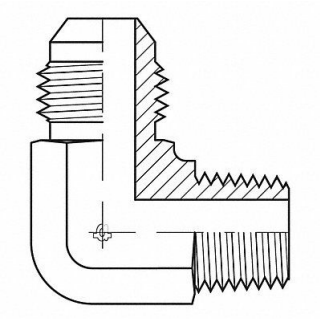

ADAPTALL Hose Adapter 5/8 JIC 1/2 BSPT, 55DR22

Item **12HMQ2523** Mfr. Model **90631008**

Product Details

Item Reference: **55DR22**	Width (in): **6**
Brand: **ADAPTALL**	Height (in): **1**
Weight (lb): **0.3**	Harmonization Code: **7307995045**
Length (in): **8**	

Product Description

Hydraulic Hose Adapter For Hose Type Hydraulic Fitting Shape Straight Rigid Flange Size Not Applicable 3 000 psi Includes O-Ring No Crimpable No Hose Fitting A Gender Male Hose Fitting B Gender Male Hose Fitting A Size 5/8 in Hose Fitting B Size 1/2 in Hose Fitting A Connection Type JIC Hose Fitting B Connection Type BSPT Fitting Material Carbon Steel x Carbon Steel 12L14 12L15