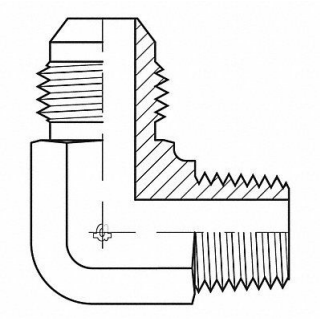

ADAPTALL Hose Adapter 1/2 JIC 3/8 BSPT, 55DR21

Item **12HMQ2522** Mfr. Model **90630806**

Product Details

Item Reference: **55DR21**	Width (in): **1.8**
Brand: **ADAPTALL**	Height (in): **0.9**
Weight (lb): **0.21**	Harmonization Code: **7307995045**
Length (in): **1.8**	

Product Description

Hydraulic Hose Adapter For Hose Type Hydraulic Fitting Shape Straight Rigid Flange Size Not Applicable 4 000 psi Includes O-Ring No Crimpable No Hose Fitting A Gender Male Hose Fitting B Gender Male Hose Fitting A Size 1/2 in Hose Fitting B Size 3/8 in Hose Fitting A Connection Type JIC Hose Fitting B Connection Type BSPT Fitting Material Carbon Steel x Carbon Steel 12L14 12L15