sales@murada.co.id
www.murada.co.id

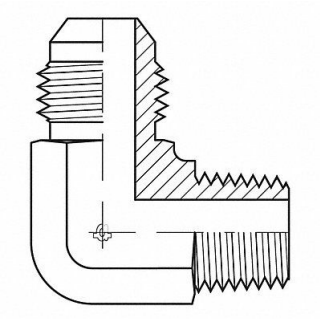

ADAPTALL Hose Adapter 1/4 JIC 1/8 BSPT, 55DR19

Item **12HMQ2520** Mfr. Model **90630402**

Product Details

Item Reference: **55DR19**	Width (in): **1.2**
Brand: **ADAPTALL**	Height (in): **0.5**
Weight (lb): **0.07**	Harmonization Code: **7307995045**
Length (in): **1.2**	

Product Description

Hydraulic Hose Adapter For Hose Type Hydraulic Fitting Shape Straight Rigid Flange Size Not Applicable 4 500 psi Includes O-Ring No Crimpable No Hose Fitting A Gender Male Hose Fitting B Gender Male Hose Fitting A Size 1/4 in Hose Fitting B Size 1/8 in Hose Fitting A Connection Type JIC Hose Fitting B Connection Type BSPT Fitting Material Carbon Steel x Carbon Steel 12L14 12L15