sales@murada.co.id
www.murada.co.id

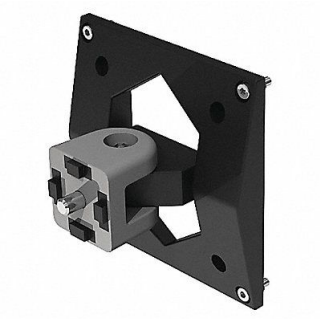

FATH INC. Monitor Mount Polyamide 118 xx112.7 mm, 55MU51

Item **17WDY62585** Mfr. Model **061SM7510040**

Product Details

Item Reference: **55MU51**	Width (in): **5**
Brand: **FATH INC.**	Height (in): **3**
Weight (lb): **0.49**	Harmonization Code: **8473305100**
Length (in): **6.5**	

Product Description

Monitor Mount Polyamide Zinc-Plated Overall Height 4 11/16 in Overall Width 4 7/16 in Mounting Hole Diameter 3/16 in Monitor Mounting Type 2-Way Pivot Mount Adjustability Rotate Black/Gray Number of Mounting Holes 4 Includes Fasteners No Projection 55 mm System of Measurement Inch Metric For Profile Type Single 15 Series 40 Series 45 Series Compatible Brand and Series Fath 15 Series Fath 40 Series Fath 45 Series Compatible Manufacturer Model Number 061SAP40H