sales@murada.co.id
www.murada.co.id

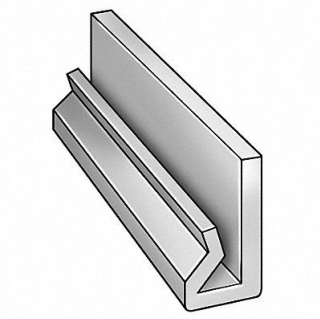

GRAINGER APPROVED J Leg 1/4 T 1 W 10 ftL UHMWPE White, 2NJE1

Item **28NVR13300** Mfr. Model **2NJE1**

Product Details

Item Reference: **2NJE1**	Width (in): **1**
Brand: **GRAINGER APPROVED**	Height (in): **0.6**
Weight (lb): **1.1**	Harmonization Code: **3916100000**
Length (in): **120**	

Product Description

J Leg Stock UHMW Polyethylene Grade Standard Plastic Length 10 ft Plastic Thickness 1/4 in Plastic Width 1 in UV Resistant No Rail Gauge 12 Temperature Range -22 Degrees to 180 Degrees F White Plastic Clarity Opaque Tensile Strength Rating Good Impact Strength Rating Excellent Friction Coefficient 0.12 Water Absorption 0.01 Percent