sales@murada.co.id
www.murada.co.id

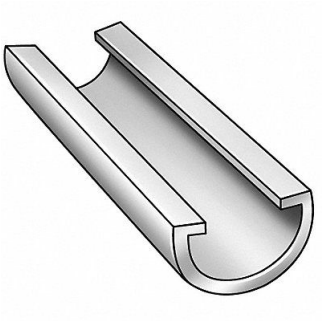

GRAINGER APPROVED HlfRndConveyorGuideRail UHMW 3/4 InDia, 2NJD3

Item **28NVR13297** Mfr. Model **2NJD3**

Product Details

Item Reference: **2NJD3**	Width (in): **0.75**
Brand: **GRAINGER APPROVED**	Height (in): **0.75**
Weight (lb): **2**	Harmonization Code: **3916100000**
Length (in): **120**	

Product Description

Half Round Conveyor Guide Rail UHMW Polyethylene Grade Standard Length 10 ft Inside Diameter 3/4 in Outside Diameter 15/16 in Bottom Opening Width 1/2 in White Tensile Strength 5 800 psi Impact Strength No Break Friction Coefficient 0.12 Water Absorption 0.01 Percent Plastic Clarity Opaque Plastic Density 0.0339 lb/cu in Plastic Hardness 66D