sales@murada.co.id
www.murada.co.id

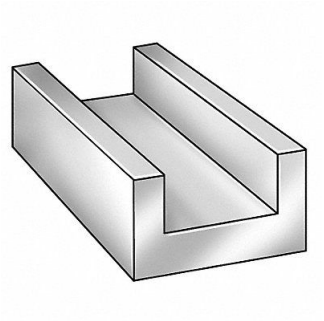

GRAINGER APPROVED U-Channel Aluminum 8 ft Overall L, 6ALZ1

Item **28NVR2625** Mfr. Model **6ALZ1**

Product Details

Item Reference: **6ALZ1**	Width (in): **1.1**
Brand: **GRAINGER APPROVED**	Height (in): **0.6**
Weight (lb): **2**	Harmonization Code: **7616995190**
Length (in): **96**	Country of Origin: **MULTIPLE**

Product Description

Aluminum U-Channel 6063 Aluminum 6063 T52 U-Channel U-Channel Profile Type Architectural 8 ft Overall Length Length Tolerance +/-1.000 in 1/2 in Outside Leg Length Outside Leg Length Tolerance +/-0.009 in 3/4 in Inside Base Width Inside Base Width Tolerance +/-0.012 in Leg Thickness 0.125 in Leg Thickness Tolerance +/-0.007 in Leg Inside Corner Shape Square Heat Treatment Tempered Heat Treatable Yes Mechanical Finish Mill Yield Strength 21 000 psi Tensile Strength 27 000 psi