sales@murada.co.id
www.murada.co.id

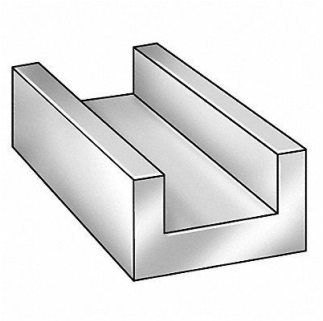

GRAINGER APPROVED U-Channel Aluminum 8 ft Overall L, 6ALY6

Item **28NVR2621** Mfr. Model **6ALY6**

Product Details

Item Reference: **6ALY6**	Width (in): **2**
Brand: **GRAINGER APPROVED**	Height (in): **1**
Weight (lb): **4**	Harmonization Code: **7616995190**
Length (in): **96**	

Product Description

Aluminum U-Channel 6063 Aluminum 6063 T52 U-Channel U-Channel Profile Type Architectural 8 ft Overall Length Length Tolerance +/-1.000 in 3/4 in Outside Leg Length Outside Leg Length Tolerance +/-0.010 in 1 1/2 in Inside Base Width Inside Base Width Tolerance +/-0.014 in Leg Thickness 0.125 in Leg Thickness Tolerance +/-0.007 in Leg Inside Corner Shape Square Heat Treatment Tempered Heat Treatable Yes Mechanical Finish Mill Yield Strength 21 000 psi Tensile Strength 27 000 psi