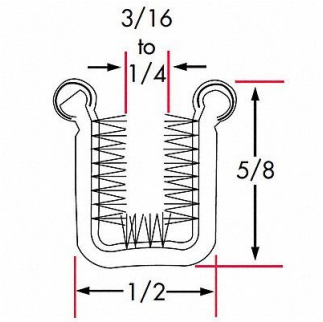


# FAIRCHILD Edge Grip Seal Window Channel 6 ft PP, 61UK48

Item **10FEX47018** Mfr. Model **01233X2**

## Product Details

| | |
|---|---|
| Item Reference: **61UK48** | Width (in): **4** |
| Brand: **FAIRCHILD** | Height (in): **4** |
| Weight (lb): **2** | Harmonization Code: **4016935050** |
| Length (in): **30** | Country of Origin: **United States** |

## Product Description

Edge Grip Seal Window Channel 6 ft PP