sales@murada.co.id
www.murada.co.id

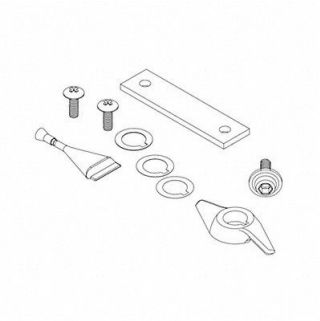

LIBERTY PUMPS Rotary Cutter Kit, 42EM66

Item **27EXF8342** Mfr. Model **K001447**

Product Details

Item Reference: **42EM66**	Width (in): **2.4**
Brand: **LIBERTY PUMPS**	Height (in): **2**
Weight (lb): **0.46**	Harmonization Code: **8413919520**
Length (in): **6.2**	

Product Description

Rotary Cutter Kit Fits Brand Liberty Pumps For Use With Grainger Item Number 21TN69 For Use With Mfr Model Number PRG101A