sales@murada.co.id
www.murada.co.id

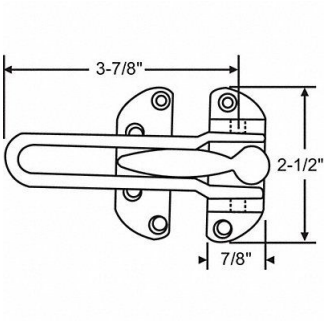


# GRAINGER APPROVED Security Door Guard Chrome 1-15/32 H, 451J30

Item **10NVR1438** Mfr. Model **16225C**

## Product Details

| | |
|---|---|
| Item Reference: **451J30** | Width (in): **2.5** |
| Brand: **GRAINGER APPROVED** | Height (in): **0.8** |
| Weight (lb): **0.365** | Harmonization Code: **3925200091** |
| Length (in): **4.5** | |

## Product Description

Security Door Guard For Use With Auxiliary Sliding/Swinging Doors Height 1 15/32 in Width 2 29/64 in Material Chrome