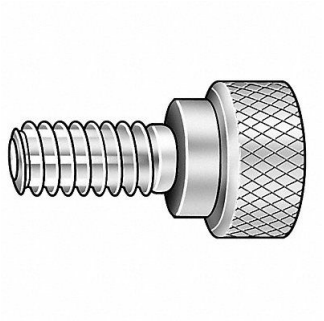

GRAINGER APPROVED Thumb Screw #4-40 Part Thread BLK 9/16 L, 5RA22

Item **06NVR44962** Mfr. Model **Z2301**

Product Details

Item Reference: **5RA22**	Width (in): **0.3**
Brand: **GRAINGER APPROVED**	Height (in): **0.3**
Weight (lb): **0.01**	Harmonization Code: **7318152095**
Length (in): **3**	Country of Origin: **United States**

Product Description

Thumb Screw Grip Style Knurled Type Thumb Screw Finish Black Oxide Material Steel Thread Size #4-40 Fastener Length 9/16 in Thread Style Partially Threaded Head Width 0.375 in Head Height 0.094 in Tensile Strength 57 000 psi Head Type Knurled Maximum Head Height 0.094 in System of Measurement Inch Features Diamond Knurl For Use in Systems Jig and Fixture Component Head Material Steel Head Shape Round