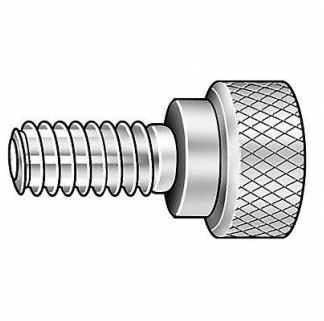

# GRAINGER APPROVED Thumb Screw 5/16 -18 Full Thread 1 1/8 L, 5PY71

Item **06NVR44916** Mfr. Model **Z1069**

## Product Details

| | |
|---|---|
| Item Reference: **5PY71** | Width (in): **1.5** |
| Brand: **GRAINGER APPROVED** | Height (in): **1.5** |
| Weight (lb): **0.14** | Harmonization Code: **7318152095** |
| Length (in): **3** | Country of Origin: **United States** |

## Product Description

Thumb Screw Grip Style Knurled Type Thumb Screw Finish Black Oxide Material Steel Thread Size 5/16 In.-18 Fastener Length 1 1/8 in Thread Style Fully Threaded Thread Length 3/8 in Head Width 1.25 in Head Height 0.25 in Tensile Strength 57 000 psi Head Type Knurled Maximum Head Height 0.25 in System of Measurement Inch Features Straight Knurl For Use in Systems Jig and Fixture Component Head Material Steel Head Shape Round