sales@murada.co.id
www.murada.co.id

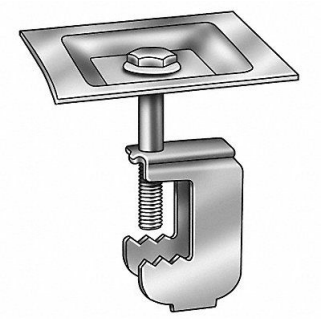

GRAINGER APPROVED Grating Clip G-Clip 1 Bar H PK50, 1VCC8

Item **06NVR18319** Mfr. Model **XSSGG1A**

Product Details

Item Reference: **1VCC8**	Width (in): **6.4**
Brand: **GRAINGER APPROVED**	Height (in): **4.6**
Weight (lb): **6.5**	Harmonization Code: **7326190080**
Length (in): **10.2**	

Product Description

Grating Clip G-Clip 316 Stainless Steel Finish - Fits Bearing Bar Height 1 in Fits Bearing Bar Spacing 3/4 to 1 in Fits Support Thickness 1/4 to 3/4 in Fits Grating Opening Size 1 in For Screw Size 1/4 in Meets/Exceeds ASTM A-240 Includes 1/4 In.-20 Hex Head Cap Screw Package Quantity 50