sales@murada.co.id
www.murada.co.id

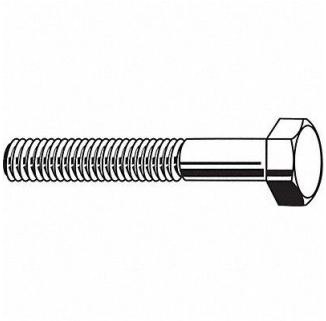

GRAINGER APPROVED HxHdCpScrw Steel 3.75 3/4 -10 5PK, 25CN90

Item **06NVR13798** Mfr. Model **U041000750375**

Product Details

Item Reference: **25CN90**	Width (in): **2.8**
Brand: **GRAINGER APPROVED**	Height (in): **2.8**
Weight (lb): **2.844**	Harmonization Code: **7318158066**
Length (in): **4.9**	Country of Origin: **MULTIPLE**

Product Description

Hex Head Cap Screw System of Measurement Inch Basic Material Steel Material Grade Grade 8 Fastener Finish Plain Dia./Thread Size 3/4 In.-10 Fastener Length 3 3/4 in Fastener Thread Direction Right Hand Fastener Thread Type UNC (Coarse) Fastener Thread Style Partially Threaded Fastener Industry Standards ASME B18.2.1 Head Type Hex Min Thread Length 1 3/4 in Head Height 15/32 in Head Width 1 1/8 in Package Quantity 5