sales@murada.co.id
www.murada.co.id

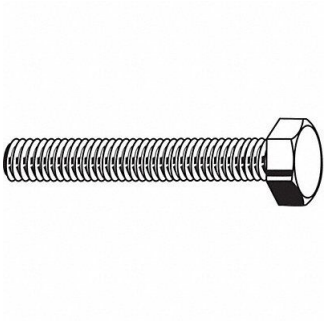

GRAINGER APPROVED HxHdCpScrw SS 2 5/8 -18 5PK, 24L216

Item **06NVR13797** Mfr. Model **U510070620200**

Product Details

Item Reference: **24L216**	Width (in): **6.57**
Brand: **GRAINGER APPROVED**	Height (in): **1**
Weight (lb): **1.146**	Harmonization Code: **7318158055**
Length (in): **8.27**	Country of Origin: **MULTIPLE**

Product Description

Hex Head Cap Screw System of Measurement Inch Basic Material Stainless Steel Material Grade 18-8 Fastener Finish Plain Dia./Thread Size 5/8 In.-18 Fastener Length 2 in Fastener Thread Direction Right Hand Fastener Thread Type UNF (Fine) Fastener Thread Style Fully Threaded Fastener Industry Standards ASME B18.2.1 Head Type Hex Min Thread Length 1 1/2 in Head Height 25/64 in Head Width 15/16 in Package Quantity 5