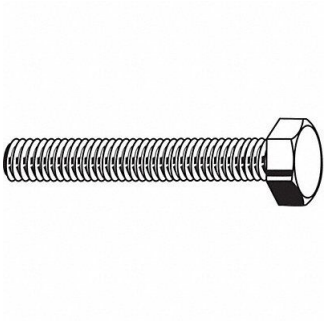

GRAINGER APPROVED HxHdCpScrw 316 SS 60mm M6-1.00 50PK, 22TP28

Item **06NVR13518** Mfr. Model **M550100600060**

Product Details

Item Reference: **22TP28**	Width (in): **6.57**
Brand: **GRAINGER APPROVED**	Height (in): **1**
Weight (lb): **1.4**	Harmonization Code: **7318158055**
Length (in): **8.27**	Country of Origin: **MULTIPLE**

Product Description

Hex Head Cap Screw System of Measurement Metric Basic Material Stainless Steel Material Grade A4 Fastener Finish Plain Dia./Thread Size M6-1.00 Fastener Length 60 mm Fastener Thread Direction Right Hand Fastener Thread Type Metric Coarse Fastener Thread Style Fully Threaded Fastener Industry Standards DIN 933 Head Type Hex Min Thread Length 60 mm Head Height 4 mm Head Width 10 mm Package Quantity 50